AKM115SAF332: Smart Actuator for ball valve, BACnet/IP

AKM115SAF332

How energy efficiency is improved

Ball valve actuator with integrated, freely programmable controller and cloud connection in one device. Can be integrated into a local building automation system via BACnet or into the SAUTER Cloud via MQTT. Communicates via Ethernet, Wi-Fi and Bluetooth. Automatic adaptation to the ball valve, precise activation and high energy efficiency with minimal operating noise and smart functions

Features

- Smart Actuator as an intelligent IoT solution for autonomous control of heating and air-conditioning applications in smart buildings
- Ready-made HVAC standard applications from SAUTER from the App Store allow efficient installation and commissioning of small systems
- Applications are selected from the library via mobile app and installed on the Smart Actuator
- Ethernet switch, Wi-Fi interface and Bluetooth LE for flexible device communication and system integration
- BACnet/IP communication (EN ISO 16484-5) via Ethernet or Wi-Fi interface
- Convenient commissioning, parameterisation and remote access to the system via a mobile app or with the SAUTER CASE engineering software
- As an IoT device, the cloud connection for remote access takes place via MQTT using TLS encryption
- Enables creation of Smart Actuator networks with distributed intelligence
- Optionally, the Smart Actuator can be used flexibly in BA networks due to free programmability via CASE Suite
- Real-time clock for calendar functions and time programmes
- BACnet notification and data recording
- Two universal I/Os for connecting external sensors and actuators
- Direct connection of up to two room operating units
- Flexibly expandable with up to four I/O modules for comprehensive control tasks
- Pre-assembled cables with mechanically and colour-coded connectors allow fast, error-free wiring for Smart Actuator and SAIO 100 I/O modules
- Fitting without tools using a bayonet ring made of glass-fibre reinforced plastic
- BLDC motor technology enables extensive diagnostic functions
- Intelligent angle of rotation adaptation and detection including feedback signal
- Electronic, torque-dependent cut-off
- Disengageable gear unit for manual adjustment and local priority operation
- For operating the 2- and 3-way ball valves VKR, VKRA, BKR, BKRA, VKAI, VKAA, BKLI, BKTI and BKTA, as well as 6-way ball valve B2KL

GET IT ON Google Play

Download on the App Store

Smart Actuator app

Technical data

Power supply		
	Power supply	24 VAC, −10%/+20%, 50...60 Hz 24 VDC, −10%/+20%
	Power consumption	Max. 5 W/10 VA (without peripherals)
Parameters		
	Surge-voltage resistance	500 V (EN 60730)
	Rotational torque	8 Nm
	Holding torque[1)]	8 Nm
	Rotation angle	90°
	Response time	200 ms
	Running time for 90°	35/60/120 s
	Characteristic	Linear, (inverse) equal percentage, (inverse) quadratic, free characteristic
	Operating noise (unloaded)	< 30 dB (A)

[1)] *Holding torque energised and de-energised*

 Right of amendment reserved © 2026 Fr. Sauter AG

Ambient conditions		
	Media temperature[2]	Max. 100 °C
	Ambient temperature	−10…55 °C
	Ambient humidity	5…85% rh, no condensation
	Storage and transport temperature	−20…70 °C
Inputs/Outputs		
	Number of universal I/O	2
Type of inputs	Analogue input U	0…10 V (Ri = 100 kΩ, ±0.05 V)
	Analogue input I	0(4)...20 mA (with ext. resistor 500 Ω or accessory 053060311**)
	Digital input[3]	Closed: ≤ 1 VDC, 1 mA Open: ≥ 4 VDC
	Ni1000	−20…100 °C (DIN 43760)
	Pt1000	−20…100 °C (IEC 751)
	Resistor	200…3000 Ω
Type of output	Analogue output U	0…10 V (±0.1 V)
Function		
BACnet	BACnet profile	B-ASC (EN ISO 16484-5)
	BACnet data point objects	Max. 100
	BACnet client links	16
	Control	6 loops
	Active COV Subscription	64
Dynamic objects	Time programmes	4 (Schedule)
	Calendars	3 (Calendar)
	Notification	4 (Notification Class)
	Historical data	10 Trend Logs (up to 15 000 entries in total)
Architecture		
	Processor	ARM Cortex M7 (528 MHz)
	RAM	9 MB
	Flash	2 × 16 MB external, for data and system
	Flash encryption	128-bit AES
	Application data	Via CASE Engine or mobile app
	Operating system	Zephyr
	Cycle time	100 ms
	Mobile app	For commissioning and maintenance
	Cloud	Via MQTT to IoT hub
	Real-time clock	For time programmes and calendars
Interfaces, communication		
Ethernet switch connection[4]	Communication protocol	BACnet/IP, HTTPS, NTP, DHCP, MQTT
	Connection	2 × RJ45 connector switch (separable)
RS-485 connection (SLC)[5]	Communication protocol	SLC master (max. 4 slave users)
	Use	ecoLink I/O module, SAIO 100 ecoUnit 1, ecoUnit 3 operating devices
	User[6]	Max. 2 SAIO 100 modules Max. 4 ecoLink modules Max. 2 ecoUnit 1/3
	Connection	5-pin connector, coded
	Cable length	Max. 120 m and max. 30 m between users [8]
	Termination	Internal, switchable via software

[2] *At media temperatures < 5 °C or > 100 °C, appropriate accessory must be used*
[3] *Switching thresholds: 2.28 V (0 to 1) and 2.69 V (1 to 0) or 2.19 kΩ (0 to 1) and 2.69 kΩ (1 to 0)*
[4] *Ethernet interfaces up to 1.5 kV, galvanic isolation*
[5] *Not electrically isolated*
[6] *ecoLink modules: EY-EM510F001, EY-EM514F001, EY-EM522F001, EY-EM527F001*

SAUTER **Right of amendment reserved © 2026 Fr. Sauter AG**

Bluetooth	Version	BLE 4.2
	Range	< 10 m
	Radiation	4 mW
Wi-Fi	Standard	IEEE 802.11 b/g
Indicators	LED indicator	2 status LEDs (green/red and blue)

Construction		
	Fitting position	See fitting instructions P100020757
	Dimensions W × H × D	172 × 122 (135) × 74 mm
	Weight	0.63 kg
	Housing	Lower section black, upper section yellow
	Housing material	Flame retardant plastic, PC/ABS

Standards, directives		
	Type of protection	IP54 (EN 60529)
	Protection class	III (EN 60730-1)
	Environment class	3K3 (IEC 60721)
CE conformity[7]	RED 2014/53/EU (CE)[8]	EN 60730-1:2011 EN 60730-2-14:1997 + A1:2001, A11:2005; A2:2008 EN 62479:2010 EN 301 489-1 V1.9.2 EN 61000-6-2:2005; AC:2005 *) EN 61000-6-3:2007 + A1:2011; AC 2012 EN 300 328 V2.2.2
	RED-DA (EU) 2022/30 (CE)	EN 18031-1
	RoHS-D 2011/65/EU & 2015/863/EU (CE)	EN IEC 63000

Overview of types

Type	Features
AKM115SAF332	Rotary actuator for ball valve, 24 V Smart Actuator, Ethernet, RS-485, Bluetooth, Wi-Fi

Power consumption: Without connected peripheral devices (room operating units, sensors, actuators or I/O modules)

Accessories

Type	Description
SAIO100F020	I/O module, 5 × UI/AO, 3 × relay
EY-RU355F***	Room operating units with LCD and NTC temperature sensor
0510420001	Adaptor required when temperature of the medium > 100 °C
0510240011	Adaptor required when temperature of the medium < 5 °C
05302401000	2 × IP54 protection set for RJ45 plugs
05393601000	Dummy plug spare part set IP54
EY-PS031F011	Power supply, 110…240 VAC/24 VDC, 1.25 A, 30 W, DIN rail mounting
EY-PS031F021	Power supply, 110…240 VAC/24 VDC, 2.5 A, 60 W, DIN rail mounting
EY-PS031F041	Power supply, 110…240 VAC/24 VDC, 4 A, 100 W, DIN rail mounting
053060200**	24 V cable, open cable end, 2-core
053060201**	Daisy chain cable 24 V, 2-core
05306020201	24 V cable, Y-connector, L = 1.0 m, 2-core
053060530**	Actuator I/O box cable, 5-pin
053060535**	SLC cable, 5-pin, open cable end, 5-core
053060310**	I/O cable (V), 3-pin, open cable end, 3-core
053060510**	I/O cable (V), 5-pin, open cable end, 3-core
05306031105	I/O cable (I), 3-pin, L=5.0 m, open cable end, 3-core

[7] *Explanation of abbreviations in the "Additional technical information" section of the product data sheet and in the appendix to SAUTER product catalogues*

[8] *If using the 5-pin SLC cable with a length of more than 1 metre in residential premises, a supply voltage of 24 VDC must be provided.*

**) EN 61000-6-2 – Restriction of HF immunity: Ethernet communication may be delayed during radiation*

 Right of amendment reserved © 2026 Fr. Sauter AG

Type	Description
053060320**	I/O cable (T), 3-pin, Ni1000 −35…100 °C
053060321**	I/O cable (T), 3-pin, Pt1000 −50…180 °C

Order the device cables separately; see the section entitled “Accessories − power and connecting cables”

Order no. cable length: ..00 (0.5 m), ..01 (1 m), .. 05 (5 m), ..10 (10 m), ..20 (20 m), ..30 (30 m)

Not all cable lengths are available

*EY-RU355F***: For available variants, see PDS 94.041*

05302401000: Maximum plug length for Ethernet plug: 43 mm

Description of operation

The AKM 115SA Smart Actuator is an integrated combination of a freely programmable automation station (AS) and a ball valve actuator. Without additional controllers, it enables self-sufficient, energy-optimised control to be set up in primary systems or individual rooms. Together with room operating units from the ecoUnit series and additional I/O modules, even complex HVAC systems or room control systems can be implemented.
For system integration and programming, the Smart Actuator can be accessed via the Ethernet and Wi-Fi communication interfaces with BACnet.
The application programming is performed with SAUTER CASE Suite. Finished applications can be stored in the SAUTER Cloud and loaded onto the Smart Actuator from there. Commissioning, access to the application visualisation and documentation take place using SAUTER CASE Suite Tools or via a mobile app. As an IoT device, the Smart Actuator connects to the SAUTER Cloud IoT hub via the integrated Ethernet or Wi-Fi interface. The data transmission, encrypted using TLS, is performed via the MQTT protocol. The Smart Actuator can be integrated into a building automation network via BACnet as an application-specific controller (B-ASC).
The Smart Actuator can be combined with 2-, 3- and 6-way ball valves. It is fitted without force by means of a bayonet connector. Manual adjustment is performed by disengaging the gears (push button on the actuator housing) and turning the lever. After the release button is let go, the actuator remains at the current position and is in “local priority operation” mode (the LED alternately flashes green and orange rapidly). After the button on the actuator is pressed for more than 5 seconds, the actuator returns to normal operation and moves to the current position setpoint. The actuator position is measured via the electromechanical travel measurement system and can be read out via the available interfaces. An additional adaptation run is not necessary after a manual adjustment or a power failure.
The brushless motor, inductive travel measurement system and electronics concept ensures parallel operation of multiple ball valve actuators of the Smart Actuator and SUT (SAUTER Universal Technology) valve actuator types.

Intended use

This product is only allowed to be used in HVAC building systems for control and regulation purposes. Other uses require the prior consent of the manufacturer.
The “Description of operation” section and all product instructions in this data sheet must be observed.
Modifying or converting the product is not permitted.

Improper use

The Smart Actuator is not suitable for:
- Safety applications
- Transport applications and at altitudes above 2000 metres
- Outdoor use and use in areas where there is a risk of condensation

Notice in accordance with California Proposition 65
The product contains lead. To be marketed in North America, the appropriate warnings must be affixed to the product or packaging.

SAUTER Right of amendment reserved © 2026 Fr. Sauter AG

Engineering notes

Power supply

The 24 VAC or 24 VDC power supply is provided via a separately ordered type 05306020*** connecting cable; see section: Accessories: >
Connecting cable.
A Y-cable (053060202**) is available for daisy-chaining the power supply. Depending on the number of connected actuators and further sensors or activators, the voltage drop over the selected cable length must be taken into account.

Smart Actuator without peripherals

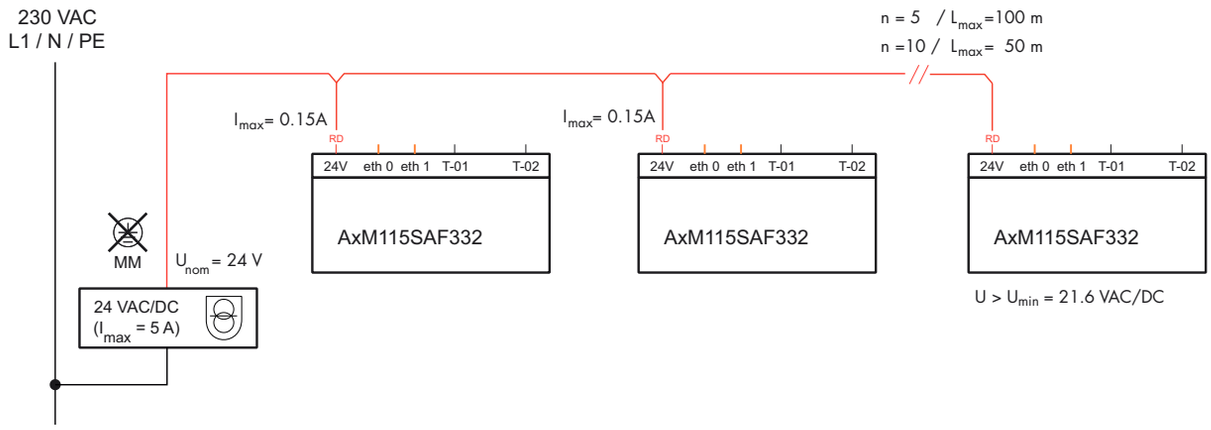

n: Number of units
L: Cable length

Note
For maximum system stability, it is recommended to supply the entire system with direct current (DC). When operating with alternating current (AC), the power supply must be designed with a power reserve of 20%.
If multiple devices are connected to one power supply, it is advisable to use slow-blow fuses and configure different start delays (StrtDly) for each device.

When connecting external devices via the Smart Actuator, the maximum current consumption increases up to I_{max} = 0.5 A per Smart Actuator. The maximum length of the 24 V supply cable is thus reduced by half for the same number of devices.

Smart Actuator with connected field devices

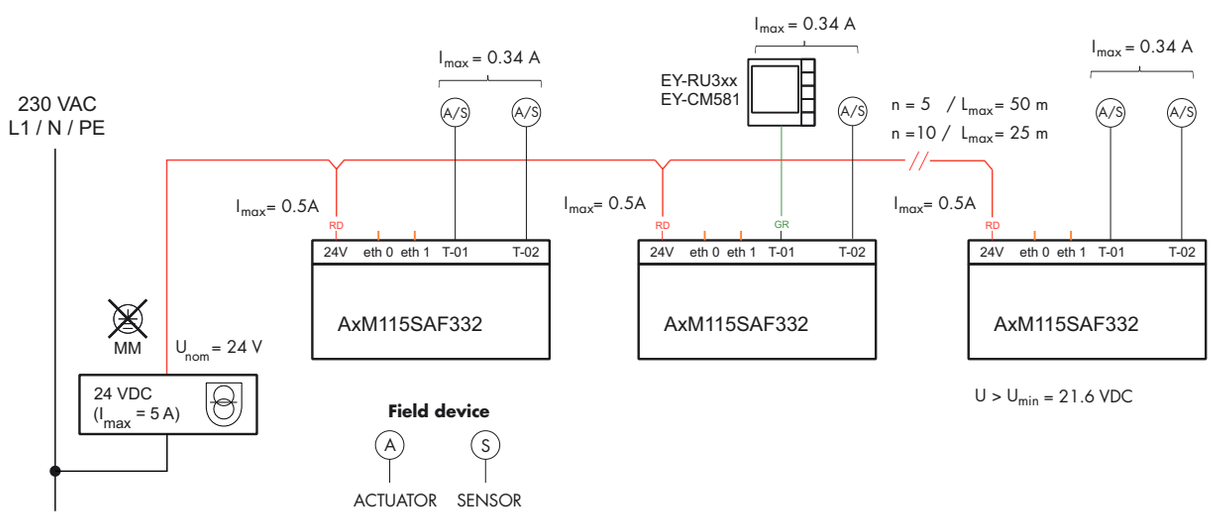

Note
If not using a SAUTER standard cable (053060200**), it must be ensured that the cross-section of the power cable is suitable for the required power and length. The conductor cross-section should not be less than 0.75 mm².

SAIO 100 I/O module, ecoUnit355 and field devices powered via the Smart Actuator
Active sensors, actuators, an SAIO 100 I/O module or an ecoUnit3**/ecosCom581 room operating unit can be powered via the Terminal 1 (T-01) and Terminal 2 (T-02) connections. The voltage provided via the terminals depends on the supply voltage of the Smart Actuator. When the Smart Actuator is supplied with 24 VAC, AC voltage is present at the terminals; when supplied with 24 VDC, DC voltage is present. In total, up to 340 mA current can be provided for external devices via the actuator.
Depending on the input voltage at the Smart Actuator, the following connection configurations are supported at Terminal 1:

Smart Actuator	SAIO 100 I/O module at T-01	ecoUnit3**/ecosCom581 at T-01
24 VAC	Yes	No (can be connected via SAIO 100 I/O module T-01)
24 VDC	Yes	Yes

IO module and room operating unit connected without separate power supply

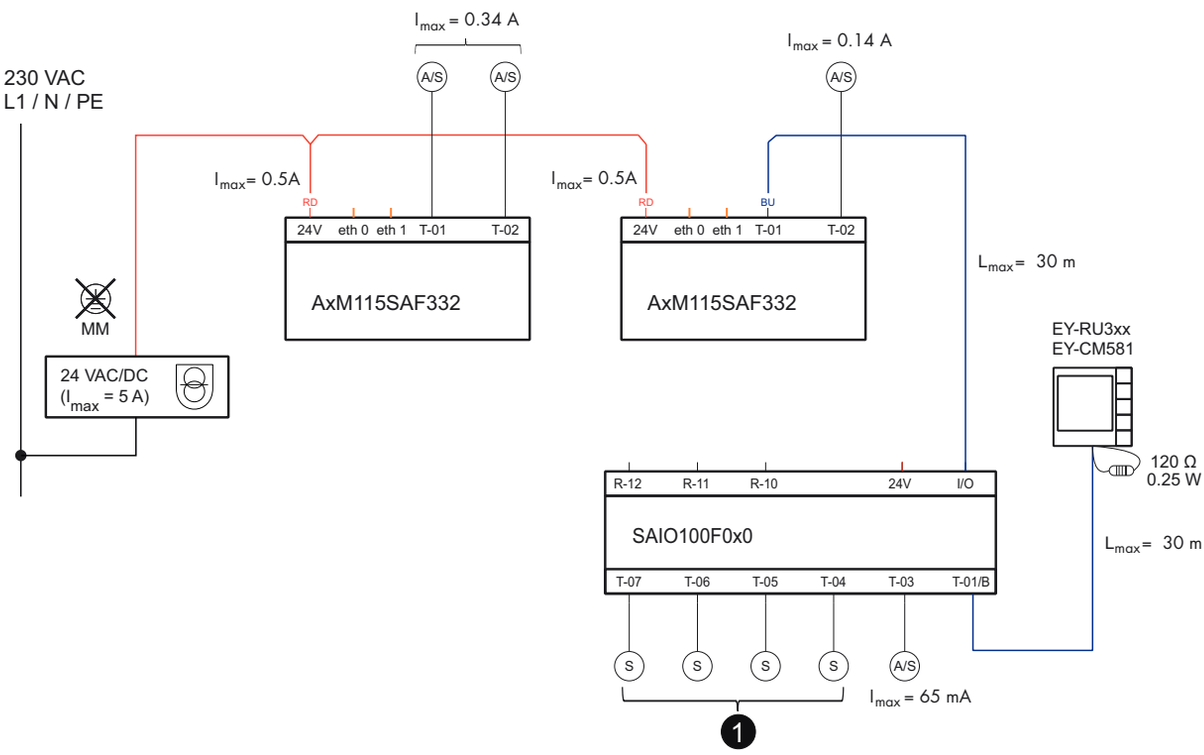

(1) Only connect passive sensors to T-04 to T-07

Note
- Terminal T-02 may be loaded with a maximum of 140 mA if an I/O module is connected to T-01.
- If terminals T-01 and T-02 are loaded with more than 340 mA, the internal thermal fuse switches off the terminals. The thermal fuse can be reset by disconnecting the terminals for 30 seconds.
- When operating the I/O module without a separate power supply, terminals T-04 to T-07 on the I/O module can only be operated with passive sensors. It is advisable to operate the I/O module with an additional external supply.
- Devices with a 2-way rectifier may only be connected with a DC supply.

When connecting two SAIO 100 I/O modules to the Smart Actuator, the I/O modules must be supplied externally.

SAUTER Right of amendment reserved © 2026 Fr. Sauter AG

Smart Actuator with two I/O modules and one room operating unit

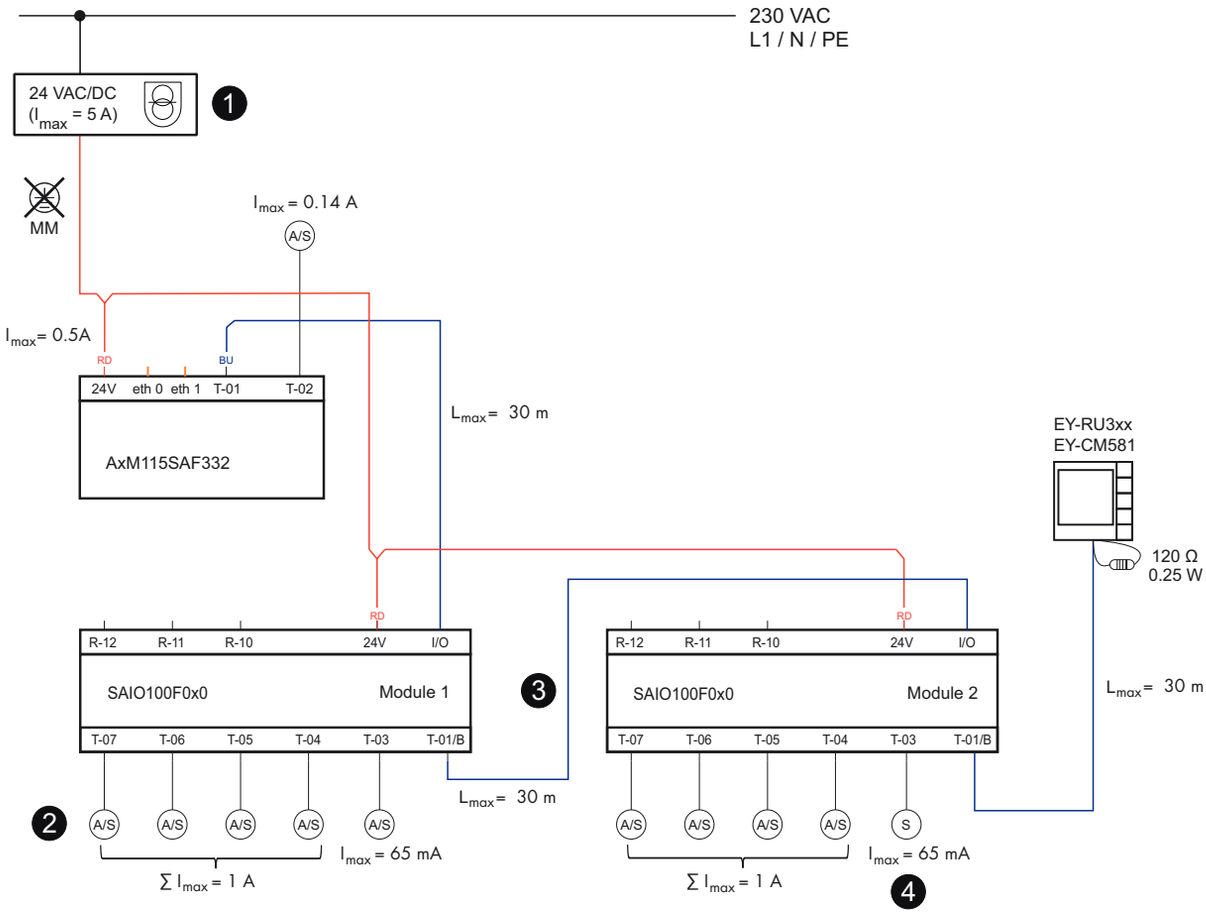

(1) DC supply preferable

(2) Max. 100 mA per terminal with 30 metre cable length

(3) When using a second I/O module, set the DIP switch on the first I/O module to 5 V and power the second I/O module separately

(4) Only a passive sensor can be connected to T-03 of the second I/O module

When routing analogue signals such as inputs/outputs (0...10 V) with simultaneous 24 V voltage supply via the Smart Actuator or an I/O module, the current loading should not exceed 100 mA per terminal for a cable length of 30 metres in order to avoid measurement deviations. When Smart Actuator cables up to 30 metres long are used, in this case the measurement error remains below 1%. If higher currents are required, a separate supply or shorter cable lengths must be planned.

Example

Connection and supply of the AVM215SF132R valve actuator (via the Smart Actuator)

- Power consumption: max. 3.5 W
- Current consumption: max. 0.145 A
- Cable length: max. 20 m

For peripheral devices that cannot be supplied by the 24 V voltage of the Smart Actuator or the SAIO 100 I/O module, for example because the device requires a different voltage or the power consumption is too high, the power supply can be used directly from the voltage source. In this case, the peripheral device and the Smart Actuator must be connected to the same ground. The brown

conductor of the Smart Actuator IO cable (3-core for T-02, 5-core for T-01) must not be connected in this case and must be insulated.

NOTICE!

- ► When supplying power to peripheral devices separately, the circuits must be electrically isolated from each other.
- ► Wire the devices properly. Avoid earth or ground loops.
- ► Avoid parallel, bundled routing of sensor or actuator lines, or bus lines and cables carrying high currents.

Additional technical information

SAUTER slide rule for valve sizing	P100013496
Fitting instructions for AKM115SAF332	P100020757
Fitting instructions for SAIO 100 I/O module	P100019026
Declaration on materials and the environment	MD 53.100
BACnet PICS (Protocol Implementation Conformance Statement)	D100542357

Abbreviations used

CE	Conformité Européenne (European conformity)
RED	Radio Equipment Directive 2014/53/EU
RED DA	Commission Delegated Regulation on Cybersecurity (EU) 2022/30 (supplement to RED, article 3.3 d/e/f)
RoHS-D	Restriction of Hazardous Substances in Electrical and Electronic Equipment Directives 2011/65/EU & 2015/863/EU
SLC	SAUTER Local Communication

Valve design

SAUTER provides various tools for valve design and engineering:

- ValveDim mobile app
- ValveDim PC program
- ValveDim slide rule

You can find the tools under the linkwww.sauter-controls.com/leistungen/ventilberechnung/
or scan the QR code

Fitting

Note

Only qualified electricians are permitted to fit and connect the products.
Prevent access by laypersons.
Disconnect defective or damaged devices from the power supply and replace them immediately.

The Smart Actuator is fitted directly on the ball valve in the system. It is fitted by putting on and turning the bayonet ring as far as it will go without any additional adjustment. No tools are required. The spindle of the ball valve is automatically coupled with the driver stem either by manual adjustment or by applying an actuating signal to move the actuator to the required position.
After fitting, the angle of rotation must be adapted. The adaptation can be started via the mobile app, via BACnet or manually. During adaptation, the actuator must be connected to the power supply.

Manual adaptation

1. For manual adaptation, briefly press the release button (2) twice within 9 seconds using a screwdriver.
   - The left LED (3) alternately flashes green and orange rapidly.

SAUTER Right of amendment reserved © 2026 Fr. Sauter AG

2. Press the button (1) between the two LEDs for > 5 seconds.
   - Device starts the adaptation movement.

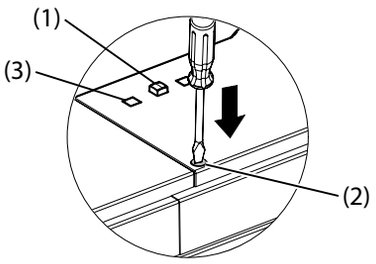

After the adaptation starts, the left LED (3) flashes green and the actuator moves to the first stop. Then it moves to the second stop. The range is recorded and stored by the electromechanical travel measurement system. The control signal and the feedback of the internal DRIVE module are adapted to this effective travel and set to 0...100%.
This new adaptation is valid when the whole process is complete. If the manual adjustment button is pressed again during the adaptation, the process is interrupted and the previous state is displayed again.
After a power failure, a new adaptation is not performed as the actuator detects its current position via the travel measurement system. The adaptation values remain stored.
The status of the adaptation (“not adapted”, “adaptation running”, “adapted” and “error”), as well as the currently measured angle of rotation in degrees, can be read out via BACnet.
If the motor parameters have been change (“Adaptation right“/“Adaptation left”), the actuator must be adapted again. This is indicated by a “not adapted” status for the adaptation. In the unadapted state, the Smart Actuator always starts at 50% until a stop is reached.

Note
An unadapted state is not indicated by the LEDs. This state can be only be read via the mobile app or via BACnet.

The adapted angle of rotation range can be changed for different applications by means of limitations. On the one hand, the minimum and maximum positions can be configured as percentages and the maximum range can be set in degrees for one-sided adaptation.
The “jammed” state is indicated at the error output in the rotation angle range of 10...90%. If the “RetryAct” parameter is set to “On”, the actuator attempts to overcome the jamming independently by repeated movement. If the jamming can be overcome, the normal control function is activated again. The feedback signal is present again and the error message is deleted.

Local priority operation

NOTICE!
The actuator may fall down during local manual adaptation.
► If necessary, take additional measures to prevent the actuator from falling.

1. For the manual adaptation, press and hold the release button (2) using a screwdriver.
   - The device switches to “local priority operation” mode.
2. Set the actuator to the desired position.
3. Let the release button (2) go for the manual adaptation.
   - The actuator remains in the set position.
   - The left LED (3) alternately flashes green and orange rapidly.
4. To leave “local priority operation” mode, press the button (1) between the two LEDs for > 5 seconds.

 Right of amendment reserved © 2026 Fr. Sauter AG

Note

- After manual adaptation using the release button, make sure that the gear unit engages. To do this, move the manual adjustment lever.
- Restarting the actuator with the factory setting or loading a new application overwrites the “local priority operation” mode.
- If the release button is pressed twice within 9 seconds in “local priority operation” mode, the “Adaptation” function is saved. After exiting local priority operation, the adaptation is then carried out.
- If the “Adaptation” command has been saved but not yet executed, the command is deleted in the event of a power failure.
- The actuator saves the “local priority operation” mode even in the event of a power failure.
- It is not possible to override the mode using the mobile app or via BACnet with the user program.

During priority operation, the drive status (DriveSt) indicates the “disengaged” status and the position feedback (PV) remains at the last automatically approached position.

Factory setting

A standard program is loaded in the factory setting that ensures operation in standard mode. At T-01, the actuator can be given the control voltage y = 0...10 V. At T-02, the feedback signal y_0 = 0...10 V is output. The range of the control voltage is mapped to the adapted angle of rotation in 0...100%. If the signal y_0 = 0…10 V is interrupted and if the interpretation of the control signal is set to “cw” (clockwise), the ball valve is closed completely (0% position).
The angle of rotation range can be limited via a min/max value. The control signal and the feedback signal can be read out via BACnet objects. Bluetooth LE is activated. No password is set for access to the actuator.

Restart with factory setting

1. Disconnect the power supply (24 V connection cable) from the device.
2. Plug the connection cable in again after waiting 3 seconds.
3. Press the button between the two LEDs for 3 seconds.
   - The operating and Bluetooth LEDs flash rapidly and simultaneously for 5 seconds.
   - The device restarts with the factory settings.

Removal

To remove the actuator, open the bayonet ring and take off the device. The device is in the middle position when delivered.

WARNING!
Opening the housing creates a risk of injury.
► Do not open the housing of the actuator.

NOTICE!

► Disconnect the device from the power supply before removing the sealing plugs at the terminals.
► To ensure IP54 protection, seal open or unused terminals with (new) sealing plugs (see accessory 05393601000).
► Do not operate the device with open cable connections.
► Condensate, dripping water, etc. must be prevented from entering the actuator along the carrier stem.
► Only use approved SAUTER cables with a suitable plug; see the section “Accessories – power and connecting cables”.

DRIVE module

Function

Regardless of the application used, a DRIVE object is used to control the actuator. This BACnet Loop object provides all the parameters required for the actuator configuration and is present once per Smart Actuator. The parameters can be configured via CASE Engine or via the mobile app.

Description

The actuator target position (control signal) in the range of 0...100% of the adapted angle of rotation is specified to the DRIVE module as X or X_Ref. Depending on the set parameters, the internal

SAUTER Right of amendment reserved © 2026 Fr. Sauter AG

positioner controls the motor in such a way that the actual position matches the target position within the set parameters for dead zone and hysteresis.

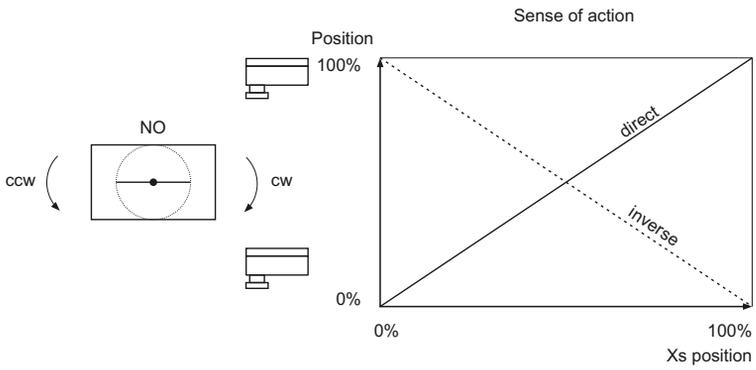

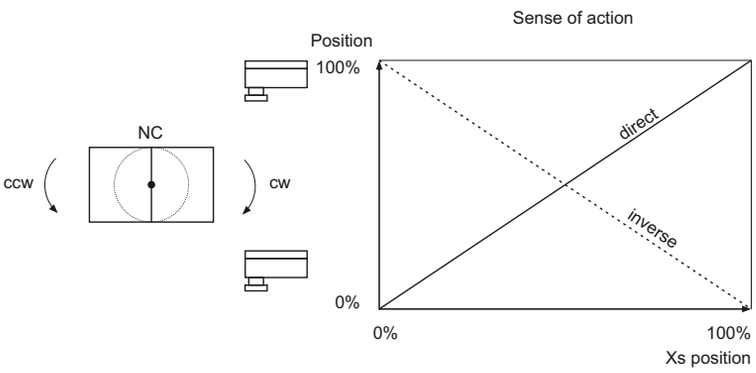

– Block definitions –

Instance number

The instance number is used to address this object and must be unique within the device for the corresponding module type. The BACnet Property Object Identifier results from the combination of the BACnet Property Object Type (Object_Type, 12) and the instance number. The Object Identifier is used to identify the BACnet object. The composite Object Identifier must be unique within the BACnet device.

Object name

The object name (Object_Name) is mandatory and must be unique within the BACnet device. It is used to address data points easily and quickly. The object name should uniquely identify a data point within the entire project.

Digression: In multi-vendor systems, the same object name can exist in different BACnet devices as BACnet requires it to be unique only within the device.

For easy logical assignment, the object name should have a unique structure with a meaningful, memorable code. Depending on the project specification, it may be composed of identifiers for location, system and building automation. For BACnet networks, up to 32 characters can be used.

The following structure is recommended:

	Network no.		DOI		Object type (short)		Instance no.		Description
Number of characters	1	/	3	_	2	_	3	_	19

The object name can be assigned in CASE Engine.

Description

The description makes it easier to identify function and objects, e.g.: AKM115SA ball valve actuator. This text appears in the CASE Engine application plan under the function module.

– Structure definitions –

Name	Description
FreeChar	Free actuator characteristic
	After the structure definition is activated, a freely definable actuator characteristic can be configured in the parameter range. For this purpose, 10 reference points are available within an X-Y coordinate cross. X-values refer to the signal input, Y-values to the signal output. The characteristic can only be selected via the mobile app, but not changed.

Connections

On this tab, input and output connections of the DRIVE module can be activated or deactivated in the CASE Engine application plan.

Inputs

Name	Data type	Values	Description
X	Float32	0…100 (0)%	Control signal in percent related to the adapted angle of rotation
X_Ref	–	–	Control signal as Controlled Variable Reference to the object containing the current value of the system. This is a BACnet property (Controlled_Variable_Reference, 19) and its value is available in the BACnet property (Controlled_Variable_Value, 21). The signal is used for connection with a LOOP object
OvrMode	U32 (MS)	1 = Auto (1) 2 = 100% 3 = Stop 4 = 0% 5 = Position x%	Priority control that overwrites the control signal X or X_Ref when active
OvrPos	Float32	0…100	Position in percent for override; becomes active when OvrMode = 5
AdptTrig	Bit	0.1 (0)[9]	Starts the angle of rotation adaptation of the actuator
LEDDsbl	Bit	0 = false (0) 1 = true	Deactivates the LED indicators on the actuator and the I/O module

Outputs

Name	Data type	Values	Description
PV	Float32	0…100 (0)%	Position feedback in percent related to the adapted angle of rotation
DriveSt	U32 (MS)	1 = Stop 2 = Running 3 = Jammed 4 = Disengaged	Current operating status of the motor. Note: In the “disengaged” state, the position feedback (PV) may not match the true position of the drive
AdptSt	U32 (MS)	1 = Not adapted 2 = Running 3 = Adapted 4 = Error	Status of the angle of rotation adaptation

[9] *After triggering the adaptation, the input must be reset to 0. If this is not done, adaptation restarts after each power failure*

SAUTER Right of amendment reserved © 2026 Fr. Sauter AG

Name	Data type	Values	Description
Err	U32 (MS)	1 = No error 2 = Undervoltage 3 = Actuator jammed 4 = Max. torque reached 5 = Max. temperature reached 6 = Sensor error (position feedback, actuator outside adapted range) 7 = Max. power failures exceeded 8 = Maintenance fingerprint 9 = Program error 10 = Motor control not initialised	If an internal error occurs, a corresponding error code is output
AdptRng	Float32	0…100°	Angle of rotation determined during adaptation. If the actuator is not adapted, the angle of rotation is output as 0
StFlgs	Bit	0.1 (0)	This BACnet property (Status_Flags, 111) represents the status of the BACnet object according to four criteria [IN_ALARM, FAULT, OVERRIDDEN, OUT_OF_SERVICE]. A bit value of 1 means that the corresponding flag is set. The connection of this output is not active and is available for monitoring purposes only (online view)
EvSt	–	Range: NORMAL = 0 FAULT OFFNORMAL HIGH_LIMIT LOW_LIMIT LIFE_SAFETY_ALARM	This BACnet property (Event_State, 36) indicates whether an active event is associated with this object. The connection of this output is not active and is available for monitoring purposes only (online view)

Parameter

On this tab, the parameters of the function module are listed. The parameters are loaded into the station if the function “Keep parameters of the DRIVE module in the AS” is not activated during the plan download.

Parameter	Default	Value range	Function
DrvAct	cw	cw / ccw	Actuator rotates clockwise (cw = clockwise) Actuator rotates anti-clockwise (ccw = counter-clockwise)
SenseAction	Direct	Direct/indirect	Interpretation of the control signal Direct = rising control signal Indirect = falling control signal
Runtime	120 s	35 / 60 / 120 s	Nominal running time of the actuator in seconds
ErrPos	NO	NO/NC	Error position: Defines the default position in case of error NO = normally open NC = normally closed
Char	Linear	• Linear • Equal percentage • Square • Inverse equal-percentage • Inverse quadratic • Free curve	Characteristic: Defines the characteristic of the actuator. A freely defined curve with 10 reference points can be configured via CASE Engine
MinPos	0%	0–100%	Minimum position: Defines the lower position limit in the adapted range in percent
MaxPos	100%	0–100%	Maximum position: Defines the upper position limit in the adapted range in percent
StrtDly	5 s	0…1200 s	Start delay: Specifies the time in seconds that the actuator waits to restart after a power failure

 Right of amendment reserved © 2026 Fr. Sauter AG

Parameter	Default	Value range	Function
ClvBlocProt	Off	Off/ 1 week/1 month	Valve jamming protection: If activated, the actuator measures the time without movement. After a set time, the actuator moves over a quarter of its set travel path and back to avoid valve blockage
DrvOptPos	Off	Off/On	Actuator position optimisation: When activated, the actuator always moves to the setpoint from one direction
DrvHys	0.5%	0.2...5%	Actuator hysteresis: Setting of the hysteresis in percent within which the actuator does not move when the setpoint changes direction
DZ	0.5%	0.2...5%	Dead zone: Setting of the dead zone with respect to the minimum signal change without changing the direction of travel
RetryAct	No	No/Yes	In the activated state, if a blockage is detected, the actuator attempts to overcome it by moving to the position multiple times. It retries after 5, 30, 60, 120 and 240 seconds. If the blockage cannot be overcome, the actuator switches to the error state “Actuator jammed”
AdptLeft	Yes	Yes/No	Adaptation is performed only on one side (left)
AdptRight	Yes	Yes/No	Adaptation is performed only on one side (right)
MaxRange	0	–	Limitation of the range for one-sided adaptation
InvertPV	No	No/Yes	The feedback signal is inverted

Behaviour in the event of a power failure

The user program and the parameterisation are permanently saved in the Smart Actuator in a flash module and are retained even if there is a power failure. A buffer capacitor in the device ensures that the Real Time Clock is retained for up to three days in the event of a power failure. After the power supply returns, the Smart Actuator starts with the last saved configuration. The motor is not enabled until the set time for the start delay has elapsed.

Note
High storage or transport temperatures can greatly reduce the capacity of the buffer capacitor for the Real Time Clock.

Note
Trend Log objects are not permanently saved. If the power supply is interrupted, the data of the objects is deleted. We recommend regular data back-up for the Trend Log objects using the building management system (e.g. SAUTER Vision Center).

Network and communication

The Smart Actuator has two Ethernet, one Wi-Fi and one RS-485 interface (SLC).
The Ethernet and Wi-Fi interfaces are used for connecting to BACnet networks or the SAUTER Cloud. Expansion modules or room operating units can be connected to the Smart Actuator via the RS-485 interface.
The Smart Actuator supports eight different network topologies via the Ethernet and Wi-Fi interface, which can be selected in CASE Sun or via the mobile app.

SAUTER Right of amendment reserved © 2026 Fr. Sauter AG

Network topology	BACnet via:	SAUTER Cloud via:	Ethernet switch configuration	
0	Ethernet	Ethernet	Switch	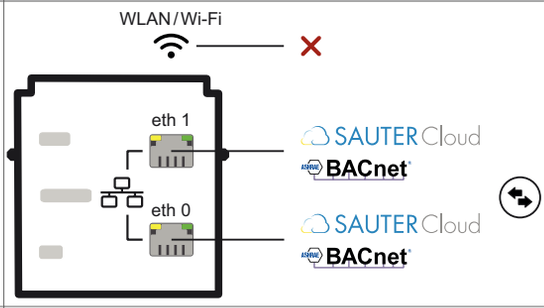
1	Wi-Fi	Wi-Fi	Disabled	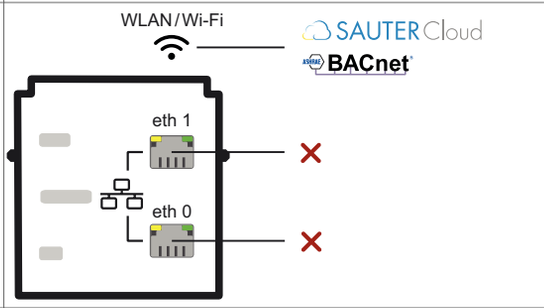
2	Ethernet	Wi-Fi	Switch	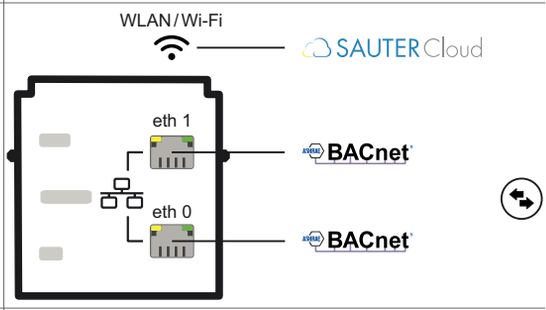
3	Ethernet	Ethernet	eth 0 and eth 1 separated	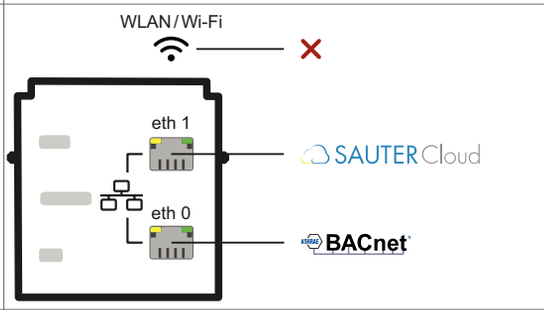
4	Wi-Fi	Ethernet	Switch	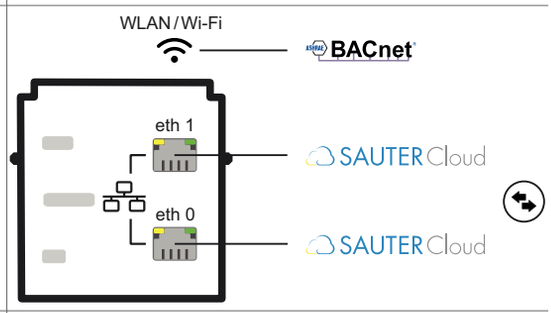
5	Ethernet	Ethernet	eth 0 active eth 1 inactive	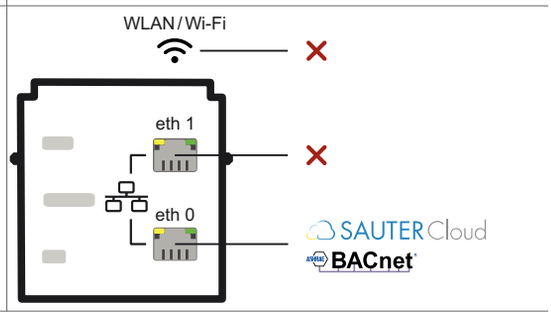

Network topology	BACnet via:	SAUTER Cloud via:	Ethernet switch configuration	
6	Ethernet	Wi-Fi	eth 0 active eth 1 inactive	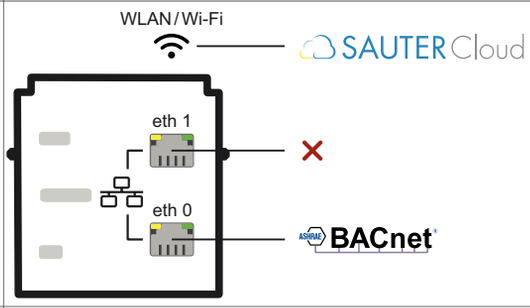
7	Wi-Fi	Ethernet	eth 0 active eth 1 inactive	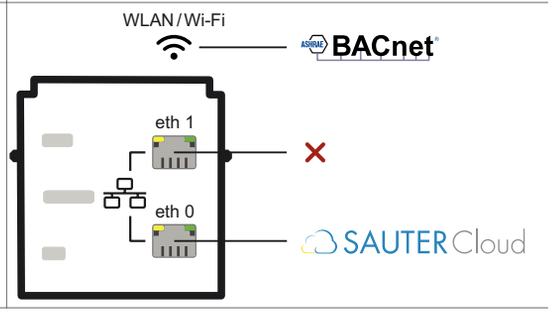

BACnet via Ethernet or Wi-Fi

The Ethernet and Wi-Fi interfaces allow the Smart Actuator to be integrated into BACnet networks.
Each Smart Actuator station must be configured for communication in an Ethernet or Wi-Fi network. All settings such as IP address, subnet mask, gateway and instance number (DOI), as well as additional properties such as host name and location, are configured via CASE Sun or the mobile app.
By default, the Ethernet interface is set to DHCP mode ((“Zeroconf”). To ensure that the Smart Actuator can be detected in CASE Sun, an address in the “Zeroconf” range must be set on the network card (e.g. 169.254.1.1 and 255.255.0.0).
To visually identify the Smart Actuator in a network, the Run/Fault LED can be set to flashing mode in the CASE Sun commissioning tool or the mobile app. The Smart Actuator can be initialised before downloading with CASE Suite.

Factory setting

- Network topology: 0
- LAN (BACnet) and WAN (SAUTER Cloud) on Ethernet switch
- IP configuration: DHCP (Zeroconf IP range 169.254.0.0/16)
- BACnet DOI: 1
- Wi-Fi: deactivated

Ethernet network cabling

The Smart Actuator is connected using a standard RJ45 network cable to a 10/100 BASE-T(X) Ethernet network. In accordance with ISO/IEC 11801 or EN 50173, shielded Ethernet cables (S/FTP) of at least category CAT-5e must be used.
The two RJ45 ports on the Smart Actuator have switch functionality, allowing multiple devices to be connected in series. Cables between two Smart Actuators must not be more than 100 metres long. For network reliability and to minimise broadcast traffic, no more than 32 devices should be connected in series (daisy chain).

Note

If a device in the chain fails, all devices behind it are cut off from network communication.

SAUTER Right of amendment reserved © 2026 Fr. Sauter AG

BACnet network integration in star topology

The Smart Actuator is connected to the Wi-Fi network via access points in a star topology. The maximum number of BACnet devices depends on the network quality and the available bandwidth. This means no fixed number can be given. The technical limit for a star topology is 250 devices.

RS-485 (SLC)

The RS-485 interface is used to connect up to four SLC devices. SAIO 100 modules, ecoLink modules or ecoUnit3**/ecosCom581 room operating units can be connected. The devices are assigned and configured in CASE Engine. Network addressing of the SAIO 100 modules is done using DIP switches on the device. Network addressing of the ecoUnit3**/ecosCom581 devices is described in their respective product data sheets.
Examples of possible device combinations include:

Combi-nation	Smart Actuator	SAIO 100 I/O module (1)		SAIO 100 I/O module (2)		ecoUnit3**/ecosCom581	
	EoL[10] (SW switch, On = active)	SLC address	EoL (DIP switch)	SLC address	EoL (DIP switch)	SLC address	EoL (120 ohms at D+/D−)
1	On	1	On	–	–	–	–
2	On	1	Off	–	–	1	Yes
3	On	1	Off	2	On	–	–
4	On	1	Off	2	Off	1	Yes
5	On	–	–	–	–	1	Yes

RS-485 network cabling

Pre-assembled plug-in cables are available for connecting the Smart Actuator and SLC devices.
The wiring must be separated from the other power-carrying wiring and must adhere to the specifications of standards EN 50174-1, EN 50174-2 and EN 50174-3.
The bus length for communication between two devices depends on the bus cable used.
When connecting the bus wiring via terminals, ensure that the polarity of all signals is correct.
When using the pre-assembled bus wiring, no cable shielding is required. In this case, the cable length between two devices is limited to a maximum of 30 metres. If longer cable lengths are required, the standard cable can be extended with CAT-5 cables and J-Y(ST)Y cables. For optimal immunity to interference, ensure that the cable shield is continuous along the entire bus line and connect it at a single point as close as possible (no more than 8 cm) to protective earth.
When using standard cables (CAT-5 / J-Y(ST)Y), the maximum possible total bus length is 500 metres for SLC.
In the case of RS-485 interfaces, the bus wiring must have line topology. Star, tree or branch topologies are not recommended.
If peripheral devices (ecoLink or ecoUnit3**/ecosCom581 on RS-485) without internal terminating resistors are installed at the start or end of the bus line, a 120 Ω (0.25 W) terminating resistor must be installed in parallel to each of the data lines D+/D−.
For further details, see fitting instructions P100020757 for the AKM115SAF332 Smart Actuator.

Note
If a 5-pin SLC cable longer than one metre is used, a 24 VDC power supply must be provided to comply with the limits for residential buildings.

Commissioning via Bluetooth LE

The Smart Actuator can be configured via the Bluetooth interface using the SAUTER “Smart Actuator” app. The mobile app is available free of charge in the Google Play Store and the Apple App Store (scan QR codes on the first page).

Pairing devices via Bluetooth

1. Activate Bluetooth on the mobile device.
2. Activate Bluetooth on the Smart Actuator. To do this, press the button between the status LEDs.
   - The blue status LED flashes. The device waits 3 minutes for pairing with the mobile device (factory setting).

[10] *EoL: End of line resistor*

 Right of amendment reserved © 2026 Fr. Sauter AG

3. Scan the QR code on the device or press the “Discover devices via Bluetooth” button.
4. Select the device from the displayed list.
5. If a password is set for device security, enter the password of the Smart Actuator in the app.

> The blue status LED lights up continuously. The Smart Actuator and the mobile device are paired.

Note
The Bluetooth interface can be deactivated via CASE Sun, CASE Engine or via the SAUTER Cloud using the mobile app. Manual activation on the device by pressing a button is then no longer possible.
After a power failure, the Smart Actuator and the mobile device must be paired again.
A Smart Actuator can only be paired with one mobile device at a time.

The active time of the Bluetooth interface can be set to different time intervals using the mobile app or CASE Sun. The available values are *3 min*. (factory setting), *15 min.*, *1 h*, *6 h*, *12 h* and *infinite*.

SAUTER Cloud integration and mobile app

As an IoT actuator, the Smart Actuator can be connected directly to the SAUTER Cloud via the integrated Ethernet or Wi-Fi interface. The interface is activated and configured via CASE Sun, CASE Engine or the mobile app. In order for the Smart Actuator to be logged on to the SAUTER Cloud, the device must be assigned to a project using the mobile app. Projects and associated users can be created and administered using the app.
The SAUTER Cloud makes the following functions of the Smart Actuator available for remote access via the mobile app:

- Device configuration
- Configuration of the network interfaces
- Access to the SAUTER application library
- Loading and parameterising heating and air conditioning applications
- Visualising live values
- Backup and restore of configurations
- Creating and organising projects
- Configuration of users
- Connecting projects and devices to the SAUTER Cloud
- Firmware update via the Cloud
- Creating templates

Security

All data and system information stored in the flash memory is encrypted with AES-128. To prevent unauthorised access via Bluetooth LE, administrator and specialist passwords must be set using the mobile app. If the Smart Actuator is added to a project and is to be connected to the SAUTER Cloud, it is mandatory to assign a password.

Note
The device password must meet the following criteria:

- At least 8 characters
- At least one uppercase letter, one lowercase letter and one special character

If the password is lost, the Smart Actuator must be reset to the factory settings and reconfigured.

The actuator supports three user levels:

- Administrator
- Specialist
- Guest

When using applications, detailed write and read accesses can be configured for user levels based on the parameters used.
The data transfer between the Smart Actuator and SAUTER Cloud is encrypted via MQTT.

Technical specifications of the inputs and outputs

Universal inputs (UI)
The functions of the universal inputs are defined when the application is created using CASE Engine.

SAUTER Right of amendment reserved © 2026 Fr. Sauter AG

Number of inputs	2
Type of inputs	Voltage (U) Current (I) Ni1000/Pt1000 Resistance (R) Digital input (DI)
Protection against external voltage	30 VDC/24 VAC
Refresh rate	100 ms (U), 600 ms (R, Ni1000, Pt1000)

Voltage measurement (U)

A 3- or 5-pin (V) cable is used for the voltage measurement. The voltage to be measured is connected between the grey (signal) and blue (MM) wires. The signal must be potential-free. If required, an offset and the slope can be set via CASE Engine.

Voltage (U)	With cable 053060510** (T-01) or 053060310** (T-02)
Measuring range	0…10 V
Resolution	≤ 0.01 V
Accuracy	± 0.05 V
Input impedance (Ri)	100 kΩ

Current measurement (I)

A current measurement 0(4)...20 mA is possible with the (I) cable 05306031105. A parallel resistor (500 Ω) between the grey wire (signal) and the blue wire (MM) is integrated in the cable on the connector side. The current signal must be potential-free and is connected between the grey and blue wires.

Current (I)	With cable 05306031105 for current measurement (T-02)
Measuring range	0(4)…20 mA

NOTICE!
Device damage due to short circuit.
► The 24 V power supply must not be shorted to earth (blue wire) or the signal cable (grey wire).

Temperature measurement (Ni/Pt)

For direct temperature measurement, plug in cable temperature sensors (T) are available in various lengths and versions (Ni1000 and Pt1000).
Standard Ni/Pt1000 sensors or resistors can still be connected using two wires by means of a 3- or 5-pin (V) cable. The signal to be measured is connected between the grey (signal) and blue (MM) wires. No external common ground point should be used for the temperature measurement.
The inputs require no calibration and can be used immediately. Long sensor lines with corresponding line resistance can be compensated in the CASE Engine application plan.
At a cable resistance of 2 Ω (cable cross-section 1.5 mm^2, 85 m) of an Ni1000 sensor, the function module CH_AI receives the scaling parameters Offset b = –0.435 and Scaling a = 1 (for operating point 21 °C). Other cable resistances can be calculated and can be compensated via the parameterisation in CASE Engine.

Ni1000	DIN 43760 with cable 053060320** (T-02)
Pt1000	IEC 751 with cable 053060521**
Measuring range	-20…100 °C
Resolution	≤ 0.3 K
Accuracy	± 1 K
Measurement current	≤ 1 mA

Resistance measurement (R)

A 3- or 5-pin (V) cable is used for the resistance measurement. The resistor to be measured is connected between the grey (signal) and blue (MM) wires.
The measuring range for the resistance measurement is limited to 3 kΩ. If line break detection is desired, this measurement can be recorded in the CASE Engine application plan with a threshold value of e.g. 2.9 kΩ.

Resistance (R)	With cable 053060510** (T-01) or 053060310** (T-02)
Measuring range	200…3000 Ω
Resolution	≤ 5 Ω
Accuracy	± 10 Ω
Measurement current	≤ 1 mA

Digital inputs (DI)

The digital input function can be used with both potential-free contacts and voltage signals. A 3- or 5-pin (V) cable is used to record potential-free contacts as well as voltage signals. The potential-free contact or the voltage to be measured is connected between the grey (signal) and blue (MM) wires.
Digital inputs are generally used as alarm/status inputs. Therefore, an open contact corresponds to the state 0 = Inactive (bit = 0). A closed contact corresponds to the state 1 = Active (bit = 1). This assignment, defined as normal polarity, can be inverted using CASE Engine if required.

Digital input (DI)	With cable 053060510** (T-01) or 053060310** (T-02)
Potential-free contacts	Connected to ground Closed (1): < 2 kΩ Open (0): > 3 kΩ
Output current	≤ 1 mA
Voltage signal	Switching threshold low (1): ≤ 1 V Switching threshold high (0): ≥ 4 V

Analogue outputs (AO)

A 3- or 5-pin (V) cable is used to record the output voltage. The 0...10 V signal is applied between the grey (signal) and blue (MM) wires.
The output can be subjected to a load of 1.5 mA up to 10.5 V (the outputs do not have an active sink capability).
The analogue output is short circuit-proof and grounded and is protected from external voltage.

NOTICE!
Device damage due to short circuit.
► Permanent short-circuiting of multiple outputs leads to their thermal destruction.
► A short circuit of the analogue outputs can lead to unwanted I/O states.

Note
During a plan download, the AO outputs switch to the safety value set in the CASE Engine plan.

Digital outputs (relays)

When an SAIO 100 I/O module is connected, additional relay outputs are available:

Number of outputs (SAIO 100)	3 (DO)
Type of outputs	Relays, changeover contacts (0-1)
Load on outputs	230 VAC, 10 A
Switching frequency	Min. 3 × 10^5 cycles
Switching voltage	24…250 V

Note
During a plan download, the DO outputs switch to the safety value set in the CASE Engine plan.
The “Polarity” setting affects the safety value of the DO outputs. The delay from state 0 to 1 (active) becomes the delay from 1 to 0 (inactive).

SAUTER Right of amendment reserved © 2026 Fr. Sauter AG

LED indicator

Two LEDs in the cover of the Smart Actuator indicate its operating statuses.
The 3-colour, left LED (the electrical connections are located to the left of the observer) is used to signal general states of the device. The blue, right LED signals the status of the Bluetooth LE interface.

Left LED (3-colour)

Status[11)]	Indicators	Description
Off	●	Device off, no power supply
Continuous green	●	Normal mode
Green→Orange→Red	●→●→●	Device being localised
Rapidly flashing green	◉	Adaptation running
Continuous orange	●	Device is starting
Flashing orange	◉	Firmware update
Continuous red	●	Configuration incorrect, program missing or program download
Rapidly flashing red	◉	Firmware error
Orange (left LED) and blue (right LED) flashing alternately	◉ | ◉	Factory setting is loaded (only when restarting with factory settings by pressing the button on the actuator)
Green and orange alternately flashing rapidly	◉ | ◉	Local priority operation active

Right LED (blue)

Status[12)]	Indicators	Description
Off	●	Bluetooth deactivated
Flashing blue	◉	Bluetooth on, not connected
Continuous blue	●	Bluetooth connection to mobile app active

BACnet and DDC function with CASE Suite

The Smart Actuator is a BACnet device as per BACnet device profile B-ASC (BACnet Application Specific Controller) with the additional support of BACnet time programme objects (Schedule/Calendar) as well as BACnet Trend Logs and BACnet notification.
The Smart Actuator is freely programmable with function blocks and SAUTER CASE Suite. The program is downloaded to the device via Ethernet or Wi-Fi with CASE Engine or as a standard solution with a ready-made program via the mobile app.

Note
If communication is interrupted while downloading the program via CASE Engine or a BACnet restore is not completed correctly, the actuator remains in the error state (the left LED lights up red).
After restoring the network connection, the download must be restarted. Alternatively, the original configuration can be restored using a factory reset.

The switch-on phase of the Smart Actuator is approximately 4 seconds. The device has a plan cycle time of 100 ms. Relevant process data, e.g. setpoint as Present Value of an AV object, can be parameterised so that it is saved permanently. A firmware update can be performed with CASE Sun via BACnet router or via the mobile app and the SAUTER Cloud.

NOTICE!
Data loss due to incorrect firmware update
► Always back up the user data or system configuration before updating the firmware.

[11)] *LED flashing: 500 ms on, 500 ms off*
LED flashing rapidly: 100 ms on, 100 ms off
[12)] *LED flashing: 500 ms on, 500 ms off*

 Right of amendment reserved © 2026 Fr. Sauter AG

Note
For trouble-free and fast firmware updates, it is advisable to keep additional communication on the BACnet network to a minimum.

The user parameters from CASE Engine and the user data (e.g. modified by BACnet client) are permanently stored in the flash memory and are power-independent.
The following function limits apply:

Function, BACnet object	Number
BACnet Value objects (analogue, binary, multi-state)	100
BACnet Loop objects	6
BACnet Schedule objects	4
BACnet Calendar objects	3
BACnet Trend Log objects	10
BACnet Notification Classes	4
BACnet Client (DS-RP-A/DS-COV-A with EXT_VAL function block)	16
Optimisation modules (OPT_H + OPT_C)	4
Group communication modules (GRPCOM_B)	32
Group communication modules (GRPCOM_R + GRPCOM_U)	12
Room operating unit module (ROOM_UNIT)	2
Number of SAIO 100 I/O modules	2
Number of ecoLink I/O modules	4
Number of COV logins	64
Max. number of master-slave devices in a group	8 (1 master, up to 7 slaves)
Number of function modules (without BACnet objects), total	300

Further information on BACnet and DDC functionality is available in the BACnet PICS (Protocol Implementation Conformance Statement) and the online help for CASE Suite.

Data recording

The BACnet functionality can be used to create up to 10 Trend Log objects (data points). A recording can be defined either periodically (time interval) or by means of a COV threshold. Up to 15,000 entries can be saved. After this, the oldest data is deleted according to the FIFO principle.
The recorded Trend Log objects are not permanently saved. If the power supply is interrupted, the data of the objects is deleted. We recommend regular data back-up for the Trend Log objects using the building management system (e.g. SAUTER Vision Center).

Live Values

For commissioning purposes, up to three BACnet objects can be monitored simultaneously via mobile app or via the SAUTER Cloud. The maximum display duration of Live Values is 1 hour. After this, the oldest data is deleted according to the FIFO principle. The data update frequency is 2 seconds. When the Live Values page is closed in the app or in the SAUTER Cloud, the data is deleted.

CASE Suite integration of the inputs/outputs of the SAIO 100 and ecoLink modules as well as the room operating unit

The engineering of the inputs and outputs of the Smart Actuator and the I/O modules is performed using CASE Suite. When a Smart Actuator is selected in the BACnet network plan, it can be created for one to eight master-slave rooms in an AS group.
In CASE Engine, the definitions are used to specify the types and addresses of the required I/O modules (1…4) and the room operating units (1, 2). After that, all the inputs and outputs of the Smart Actuator (T-01, T-02), the SAIO 100 I/O modules (T-03 to T-07 and BO-10 bis BO-12) and the ecoLink modules can be used in CASE Engine as channels (CH_Ax, CH_Bx) and as ROOM_UNIT and mapped to BACnet data points (Value objects).

RTC (Real Time Clock)

A Real Time Clock (RTC) is integrated into the Smart Actuator for the time programmes (schedules/calendars). The date, time and time zone are set in the device when loading the user

SAUTER Right of amendment reserved © 2026 Fr. Sauter AG

data. The BACnet services “DM-TS-B” and “DM-UTC-B” are used to synchronise the time and date automatically if a BACnet time master is specified accordingly (e.g. SAUTER Vision Center, moduWeb Vision, modu525). When connected via a Wi-Fi network, the time is set as standard via an NTP time server.
A manual setting of time, date and time zone can be done via BACnet browser, mobile app or CASE Sun.
Daylight saving is activated as standard in the network properties (CASE Engine) of the Smart Actuator and includes all Smart Actuators and/or automation stations integrated in the same network. The deviation of the time without resynchronisation is max. 2 minutes per year.

Firmware

The Smart Actuator is supplied with up-to-date firmware. At the time of commissioning, a newer firmware version may be available. Before commissioning the system, you should therefore check whether a new version is available.
A firmware update can be performed via the BACnet network with CASE Sun or via the mobile app and SAUTER Cloud. After connecting to the SAUTER Cloud, as soon as new firmware is available, the new firmware is offered for installation in the “Overview” area of the mobile app.

Disposal

When disposing of the product, observe the currently applicable local laws.
More information on materials can be found in the Declaration on materials and the environment for this product.

 Right of amendment reserved © 2026 Fr. Sauter AG

Connection diagram

AKM115SAF332

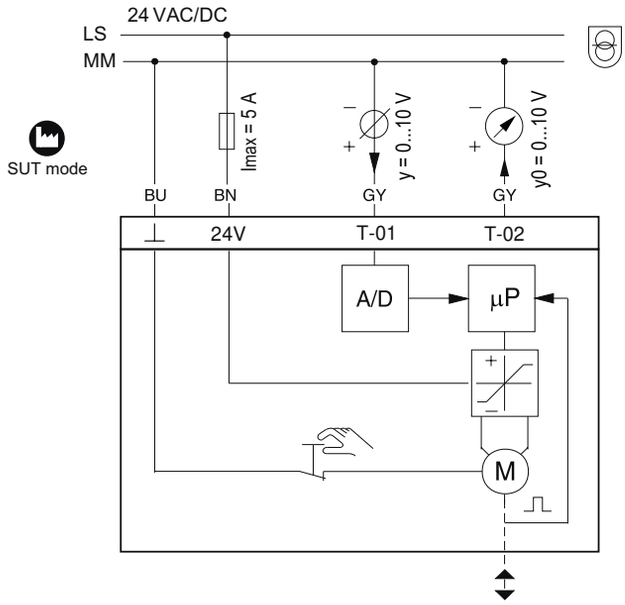

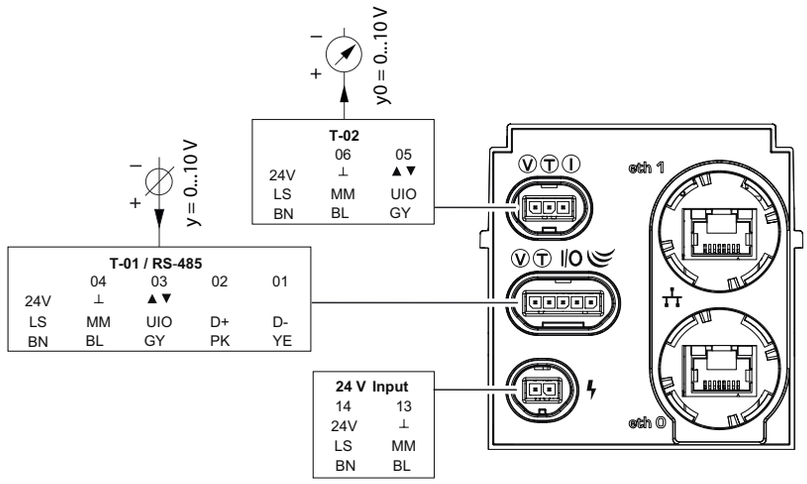

SAUTER Right of amendment reserved © 2026 Fr. Sauter AG

SAIO100F020

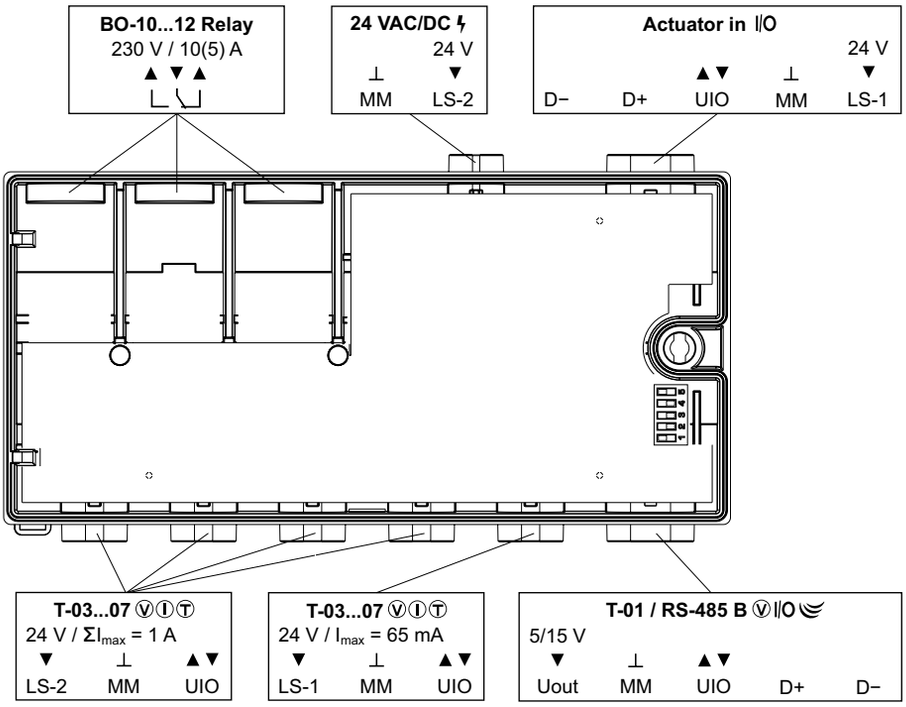

Dimension drawing

All dimensions in mm.

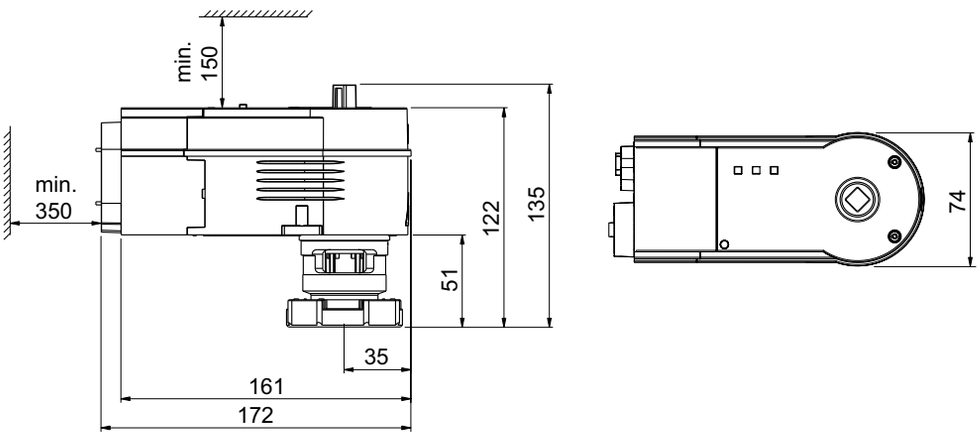

Accessories

All dimensions in mm.

SAIO100F020

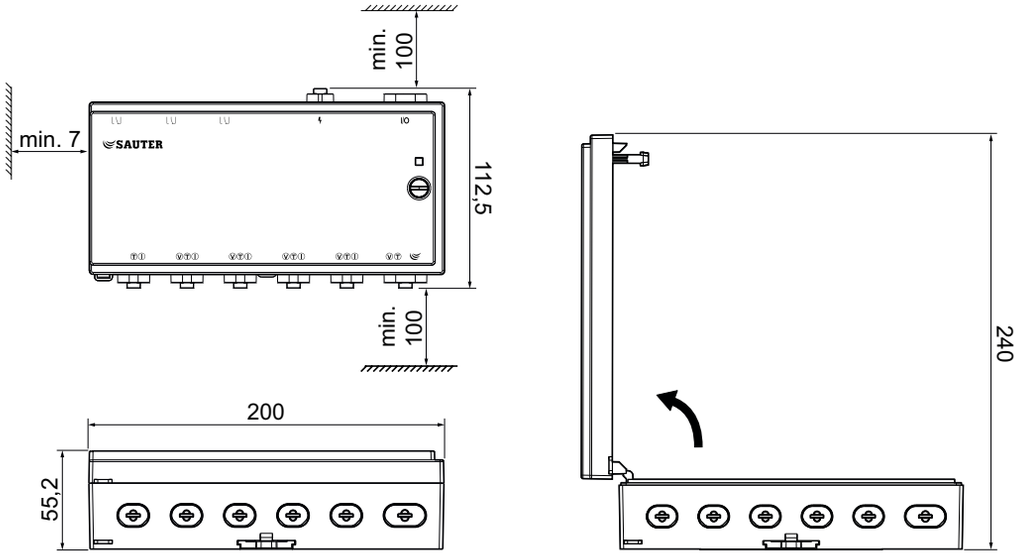

05302401000

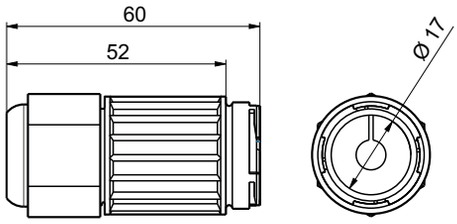

Plug positions

AKM115SAF332	SAIO100F020
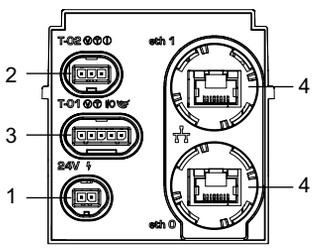	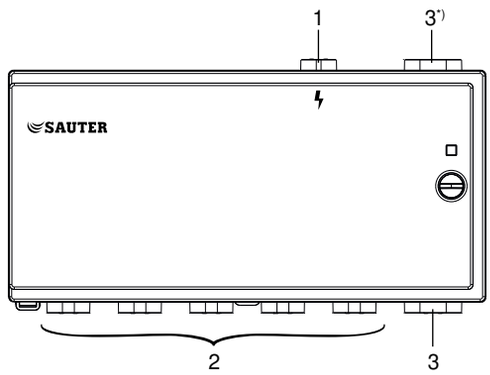 *) Only connect I/O module cables

SAUTER Right of amendment reserved © 2026 Fr. Sauter AG

Power and connecting cables

Port[13]	Symbol	Designation	Colour O-ring	Plug/cable	Type
1	ϟ	Power supply 24 V	Red		053060200…
		Daisy chain 24 V			053060201…
		Y-connector 24 V		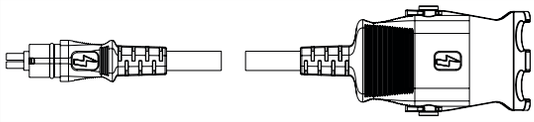	053060202…
2	Ⓥ	0…10 V, I/O signal 24 V	Yellow		053060310…
	Ⓘ	0...20 mA, I/O signal 24 V	Blue	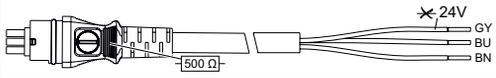	053060311…
	Ⓣ	Ni1000	White	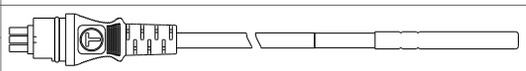	053060320…
		Pt1000	Black		053060321…
3	Ⓥ	0…10 V, I/O signal 24 V	Yellow		053060510…
	I/O	Actuator <-> I/O module (SAIO 100)	Blue	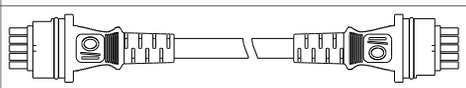	053060530…
		SLC, RS-485	Green	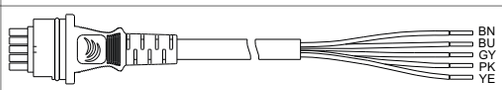	053060535…
4		Ethernet, RJ45	–		CAT 5e shielded (S/FTP)

Wire colours

24 V (+)	MM (−)	Signal	D+	D−
BN (brown)	BU (blue)	GY (grey)	PK (pink)	YE (yellow)

Cable length

Order no.	Length (m)	Conductor cross-section (mm²)
…00	0.5	0.5/0.75
…01	1.0	0.5/0.75
…05	5.0	0.5/0.75
…10	10.0	0.75
…20	20.0	0.75
…30	30.0	0.75

Conductor cross-section depends on cable type and cable length

[13] *See “Plug positions”*

Fr. Sauter AG
Im Surinam 55
CH-4058 Basel
Tel. +41 61 - 695 55 55
www.sauter-controls.com

SAUTER **Right of amendment reserved © 2026 Fr. Sauter AG**